- 5 Working Mode
- 3 Fan Speed
- 2 Sensors
- Digital LED Display
- Prevent Cold Wind In Heating Mode
- Auto Restart Function
- Main Board With Base Holder

QD-U11A

UNIVERSAL A/C CONTROL SYSTEM

QD-U11A UNIVERSAL A/C CONTROL SYSTEM

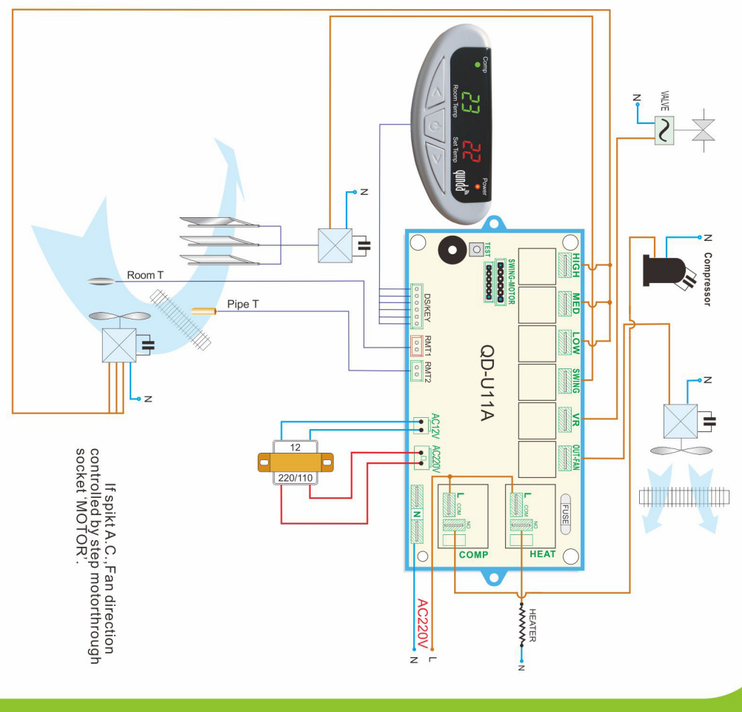

1 There should be no strong light before the IR (infra red light receiver).
2 For split A.C.,the stepper motor socket(MOTOR)has 6 pins. Two pins on both sides are common pins (12V).
Either of them must be connect with the commom pin of the stepper motor plug that has 5pins.
If stepper motor rotating direction is reversed, the common pin of the motor plug should be connect to be other common pin of the motor socket.

QD-U11A UNIVERSAL A/C CONTROL SYSTEM

MADE IN CHINA

qunda Controller Expert

UNIVERSAL A/C CONTROL SYSTEM

QD-U11A

- Auto restart function
- LED double temperature display
- Outdoor fan controlled independently

QD-U11A UNIVERSAL A/C CONTROL SYSTEM